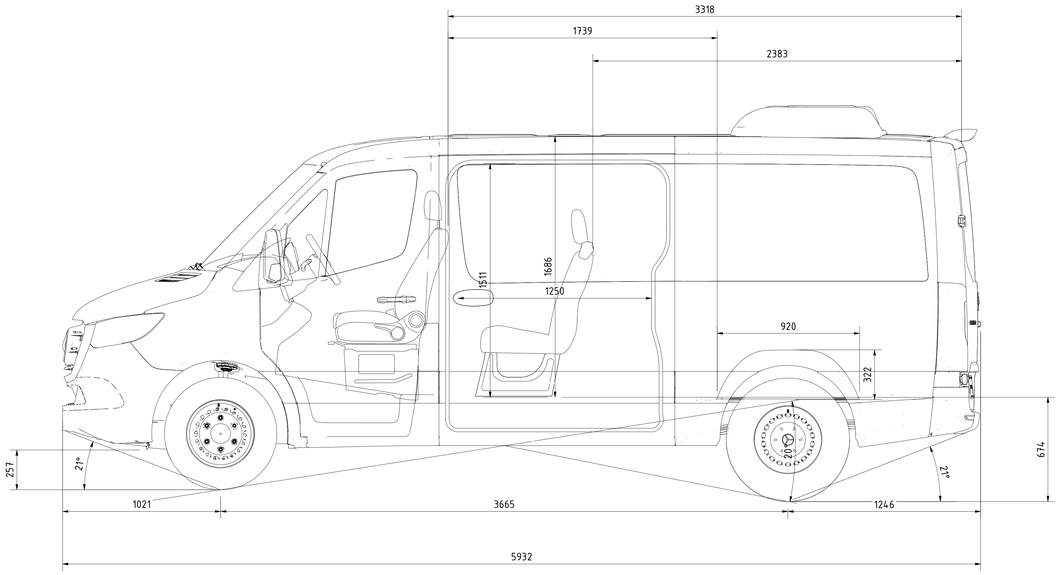

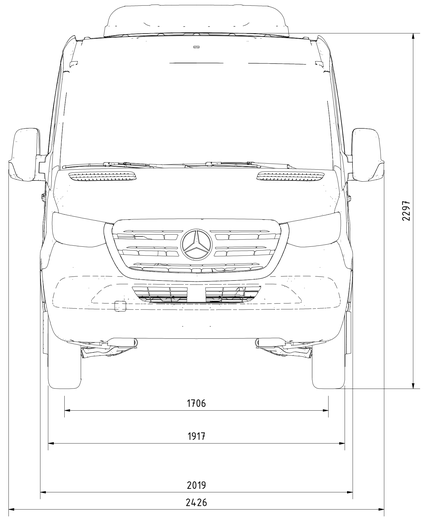

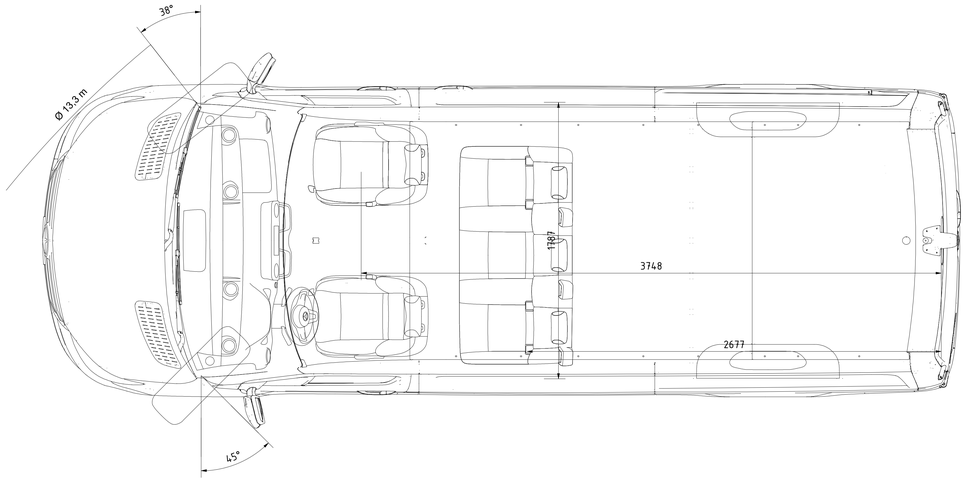

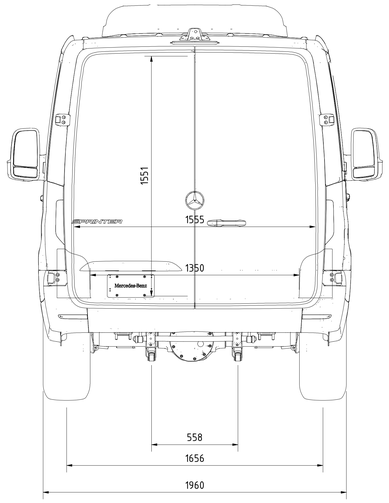

Dimensions & weights:	
Cargo area [m²]	5.08
Cargo volume [m³]	9.00
Cargo volume partition wall [m³]	N/A
Luggage area [m²]	N/A
Luggage volume [l]	N/A
Turning clearance circle - curb to curb [m]	12
Gross vehicle weight [kg]	4100
Permissable front axle load [kg]	1860
Permissable rear axle load [kg]	2430

Optional equipment:

FKA	CARGO VAN
D93	omission of partition
S02	driver seat
S04	adjustable co-drivers seat
T16	sliding door, right
U62	seats passenger compartment 3-seat-bench narrow 1st row
XZ0	model generation

Important notes:

- It is the responsibility of the bodybuilder to ensure that the vehicle is suitable for homologation after the body has been mounted.
- The drawing is simplified to some extent and is not legally binding.
- Please check whether the drawing specification complies with the chassis configuration of your order.
- Optional equipment codes not listed here, KW-codes and changes resulting from feasibility checks are not included in the drawing.
- Our instructions for the manufacture of superstructures must be observed, when planning to fit bodies of other than Mercedes-Benz manufacture.

All dimensions refer to the standard version and the base tyres.
In laden condition all axles are fully loaded (see table).

We reserve all rights for this drawing. The drawing may neither be copied nor passed on to any third person.

Dimensions are subject to a tolerance of up to +/- 3%

CREW VAN
A2LH1/RWD 4x2/4100
907643

Mercedes-Benz

12.06.2023