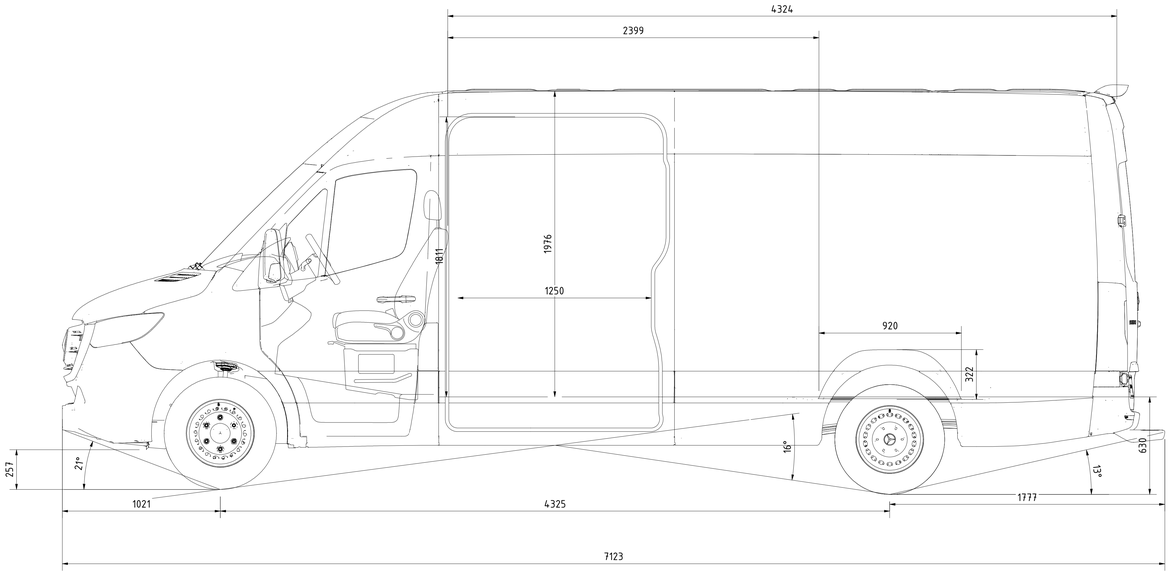

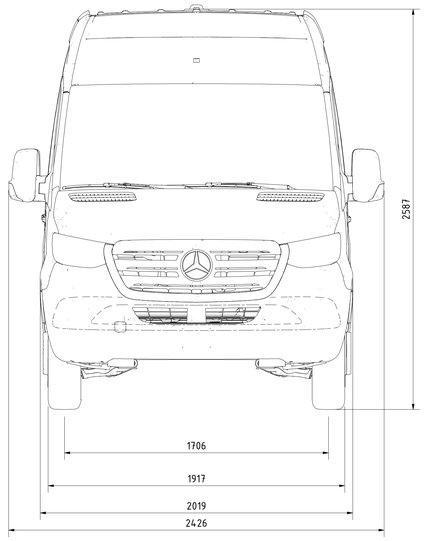

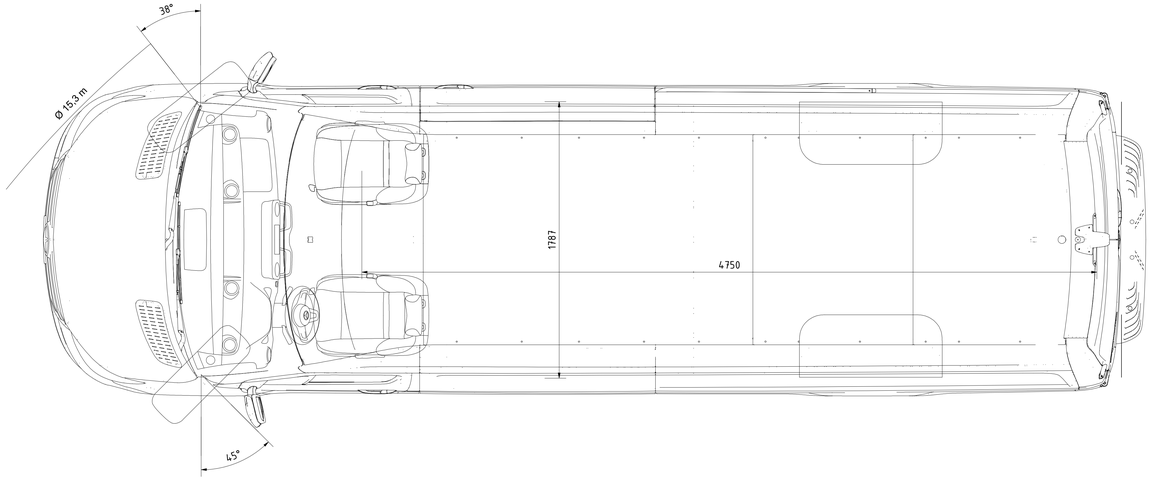

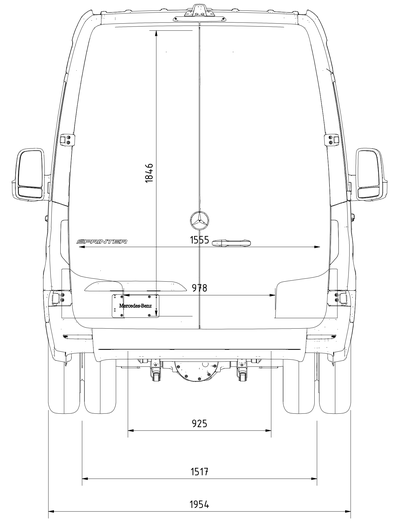

Dimensions & weights:		Optional equipment:		Important notes:
Cargo area [m²]	6.55	FKA	CARGO VAN	- It is the responsibility of the bodybuilder to ensure that the vehicle is suitable for homologation after the body has been mounted.
Cargo volume [m³]	13.90	CE8	Body set up	- The drawing is simplified to some extent and is not legally binding.
Cargo volume partition wall [m³]	N/A	D03	high roof	- Please check whether the drawing specification complies with the chassis configuration of your order.
Luggage area [m²]	N/A	D93	omission of partition	- Optional equipment codes not listed here, KW-codes and changes resulting from feasibility checks are not included in the drawing.
Luggage volume [l]	N/A	S02	driver seat	- Our instructions for the manufacture of superstructures must be observed, when planning to fit bodies of other than Mercedes-Benz manufacture.
Turning clearance circle - curb to curb [m]	14	S04	adjustable co-drivers seat	
Gross vehicle weight [kg]	5500	T16	sliding door, right	
Permissable front axle load [kg]	2100	U62	seats passenger compartment 3-seat-bench narrow 1st row	
Permissable rear axle load [kg]	3600	XZ0	model generation	

All dimensions refer to the standard version and the base tyres.
In laden condition all axles are fully loaded (see table).

We reserve all rights for this drawing. The drawing may neither be copied nor passed on to any third person.

Dimensions are subject to a tolerance of up to +/- 3%

CREW VAN
A3LH2/RWD 4x2/5500
907655

Mercedes-Benz

14.06.2023